Trials@uspto.gov
571-272-7822

Paper 33
Entered: December 30, 2014

UNITED STATES PATENT AND TRADEMARK OFFICE

BEFORE THE PATENT TRIAL AND APPEAL BOARD

RIVERBED TECHNOLOGY, INC.,
Petitioner,

v.

SILVER PEAK SYSTEMS, INC.,
Patent Owner.

Case IPR2013-00403
Patent 8,370,583 B2

Before DENISE M. POTHIER, JUSTIN T. ARBES, and HYUN J. JUNG, *Administrative Patent Judges.*

ARBES, *Administrative Patent Judge.*

FINAL WRITTEN DECISION
35 U.S.C. § 318(a) and 37 C.F.R. § 42.73

I. BACKGROUND

Petitioner Riverbed Technology, Inc. filed a Petition (Paper 2, "Pet.") seeking *inter partes* review of claims 1–27 of U.S. Patent No. 8,370,583 B2 ("the '583 patent") pursuant to 35 U.S.C. § 311. On January 2, 2014, we instituted an *inter partes* review of claims 1–27 on two grounds of unpatentability (Paper 14, "Dec. on Inst."). Patent Owner Silver Peak Systems, Inc. did not file a Patent Owner Response, and instead filed a Motion to Amend (Paper 23, "Mot.") seeking to cancel claims 1–27 and substitute claims 28–33 in their place. Petitioner filed an Opposition (Paper 24, "Opp.") to the Motion to Amend, and Patent Owner filed a Reply (Paper 25, "Reply"). A combined oral hearing for the instant proceeding and related Case IPR2013-00402 was held on September 30, 2014. A transcript (Paper 32, "Tr.") of the hearing is included in the record.

We have jurisdiction under 35 U.S.C. § 6(c). This final written decision is issued pursuant to 35 U.S.C. § 318(a) and 37 C.F.R. § 42.73.

For the reasons that follow, we grant Patent Owner's Motion to Amend to the extent it requests to cancel claims 1–27 of the '583 patent, and with respect to proposed substitute claims 28 and 30. We determine that Patent Owner has not met its burden with respect to proposed substitute claims 29 and 31–33. The Motion to Amend, therefore, is *granted-in-part*.

A. The '583 Patent

The '583 patent[1] relates to a network memory system. Ex. 1001, col. 1, ll. 8–9. According to the '583 patent, prior art information systems

[1] The '583 patent issued from U.S. Patent Application No. 11/202,697 ("the '697 application"), filed on August 12, 2005. U.S. Patent No. 8,312,226 B2

were implemented with either centralized servers or distributed servers. *Id.* at col. 1, ll. 11–14. In a centralized server system, shown in Figure 1, data are stored in central servers and provided to remote computers over a communication network upon request. *Id*. at col. 1, ll. 14–63. Such a system can be managed easily from the central location, but potentially causes a "bandwidth bottleneck" for multiple computers attempting to retrieve data over the network. *Id*. In a distributed server system, shown in Figure 2, by contrast, remote computers can access data from branch servers rather than the central servers. *Id*. at col. 1, l. 64–col. 2, l. 58. Doing so reduces the amount of data that must travel over the network, but requires complex procedures to ensure the replication and synchronization of data between the branch servers and central servers. *Id*.

The '583 patent also describes the use of caching to reduce network traffic, and problems with caching at the time. *Id*. at col. 2, ll. 59–67. For example, because web caching is based on Uniform Resource Locator (URL) or filename, not content of the document, a document may be present in the cache but not retrieved because it was stored with a different URL or filename. *Id*. at col. 3, ll. 14–20. Further, web caching is binary, such that even a small change to a document will result in the cache not being utilized. *Id*. at col. 3, ll. 20–24.

("the '226 patent") issued from U.S. Patent Application No. 11/240,110, filed on September 29, 2005, which is a continuation of the '697 application. The '226 patent is the subject of related Case IPR2013-00402. Patent Owner's Motion to Amend in Case IPR2013-00402 also is granted-in-part in the Final Written Decision entered concurrently with this Decision in its corresponding record.

The ’583 patent describes a network memory system that reduces network traffic by using appliances linked to the servers and remote computers, where each appliance is capable of determining whether a portion of requested data is locally accessible to the other appliance. *Id.* at col. 5, ll. 12–44. Figure 3 of the ’583 patent is reproduced below.

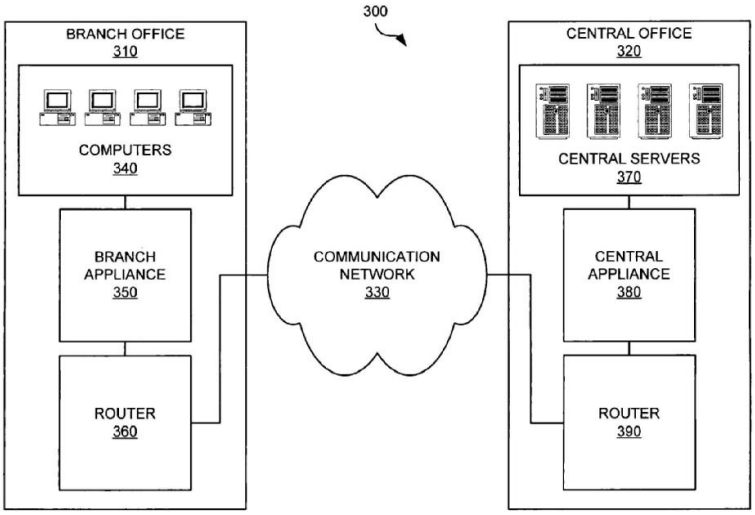

FIG. 3

Figure 3 depicts network memory system 300 comprising branch office 310 with branch appliance 350 and central office 320 with central appliance 380. *Id.* at col. 5, ll. 31–44. Branch appliance 350 and central appliance 380 transparently intercept network traffic between computers 340 and central servers 370. *Id.* at col. 6, ll. 63–66. Central appliance 380 comprises hardware and/or software elements configured to (1) receive a request for data (e.g., email or files) sent by computer 340 to branch appliance 350; (2) receive the data locally; (3) determine whether a portion of the data is locally accessible to branch appliance 350; (4) generate an instruction based on the determination; and (5) transfer the instruction to branch appliance 350. *Id.* at col. 5, l. 12–col. 6, l. 18; col. 6, ll. 47–59.

If the determination is that the data are locally accessible to branch appliance 350, central appliance 380 sends a retrieve instruction (retrieve instruction 640 in Figure 6), and branch appliance 350 retrieves the data locally and forwards the data to computer 340 (without the data having to be transferred over the network). *Id*. at col. 11, ll. 25–43. If the determination is that the data are not locally accessible, however, central appliance 380 sends the data itself with a store instruction (store instruction 440 in Figure 4), and branch appliance 350 stores a copy of the data locally for future use. *Id*. at col. 10, ll. 41–61. In another embodiment, if the determination is that only a portion of the data is locally accessible, central appliance 380 sends the non-locally accessible portion with store and retrieve instructions (instructions 740 in Figure 7A). *Id*. at col. 12, ll. 10–40.

According to the ’583 patent, the disclosed network memory “does not cache the data in the traditional sense.” *Id*. at col. 7, ll. 56–57. Data can be retrieved locally “even if the URL or filename for the data is different because the data may be identified by a pattern for the data itself and not by the URL or filename.” *Id*. at col. 7, ll. 57–60. The ’583 patent describes the use of specific data structures to determine whether a portion of response data is locally accessible. *Id*. at col. 8, ll. 51–63.

Figure 5 of the ’583 patent is reproduced below.

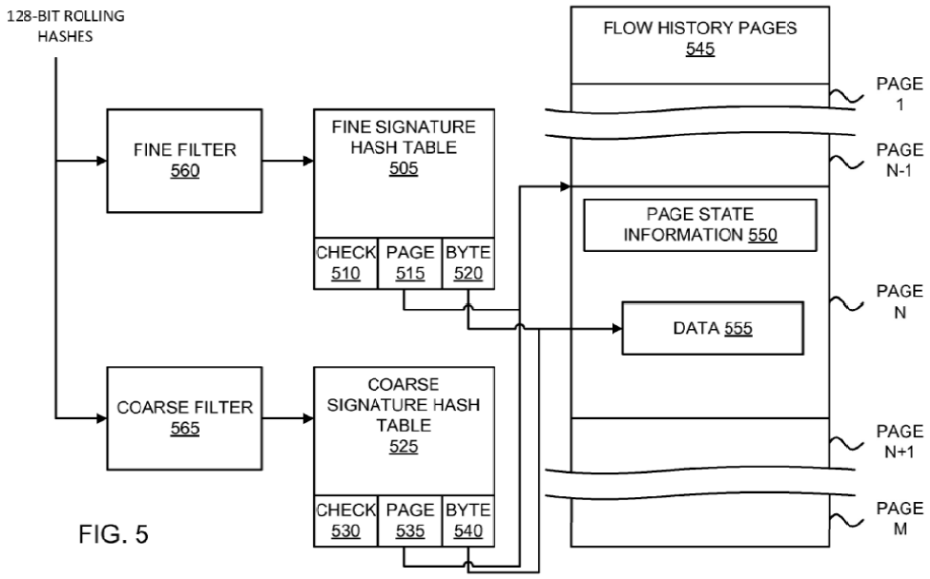

FIG. 5

Figure 5 depicts an exemplary set of data structures for the disclosed network memory system. When data are stored, for example, at the central and branch appliances, the central appliance “calculates hashes at every byte boundary of [the] data flow.” *Id*. at col. 8, l. 64–col. 9, l. 1. Each calculated hash is filtered by fine filter 560 and coarse filter 565 to determine fine and coarse sync-points (i.e., locations in the data flow that meet the fine and coarse filter criteria, with the coarse filter criteria being “more restrictive”). *Id*. at col. 9, ll. 20–34. The hashes are stored in entries of the fine signature hash table (SHT) 505 and coarse SHT 525. *Id*. at col. 9, ll. 46–57. Each entry in the tables is indexed to the response data stored in flow history pages (FHPs) 545. *Id*. at col. 10, ll. 4–40. Page fields 515/535 point to pages in FHPs 545, and byte offsets 520/540 point to the start of fine and coarse sync-points in the data, respectively. *Id*.

Upon receiving a request for data from the branch appliance, the central appliance retrieves the data locally and determines whether the data are locally accessible to the branch appliance by calculating hashes for the

data, filtering them through fine and coarse filters 560/565 to determine fine and coarse sync-points, and comparing the hashes to check fields 510/530 in SHTs 505/525. *Id*. at col. 9, l. 58–col. 10, l. 3. If there is no match, the data are not locally accessible. *Id*. If any of the hashes matches, however, "additional checks (such as direct forward comparisons and backward memory comparisons between the response data 625 and the data 555 in the FHPs 545) may also be made to determine the size of the matching region." *Id*. at col. 11, ll. 6–24. The additional checks may indicate that only a portion of the response data is locally accessible, in which case the central appliance (1) stores the generated hashes for the non-locally accessible portion (called "deltas") in SHTs 505/525; (2) stores the deltas in FHPs 545; and (3) sends the deltas with retrieve and store instructions to the branch appliance. *Id*. at col. 11, l. 55–col. 12, l. 40.

B. Status of the Claims

The challenged claims of the '583 patent can be broken down into three sets of claims, each with similar limitations. Claims 1–11 recite a network memory system, claims 12–22 recite a method, and claims 23–27 recite a network memory system. Claim 1, for example, recites:

> 1. A network memory system comprising:
>
> a source-site appliance comprising a first processor and a first memory device, and configured to be coupled to a source-site computer via a source-site local area network; and
>
> a destination-site appliance comprising a second processor and a second memory device, and configured to be coupled to a destination-site computer via a destination-site local area network, the source-site computer in communication with the destination-site computer via a wide area network;

> wherein the source-site appliance is configured to identify locally accessible data of the destination-site appliance, to intercept transmitted data sent from the source-site computer and directed to the destination-site computer, to perform a determination of whether a portion of the transmitted data corresponds to the locally accessible data of the destination-site appliance, to generate an instruction based on the determination, and to send the instruction to the destination-site appliance over the wide area network; and
>
> wherein the destination-site appliance is configured to receive the instruction from the source-site appliance over the wide area network, to process the instruction to obtain the transmitted data locally if the transmitted data corresponds to the locally accessible data of the destination-site appliance, and to transfer the transmitted data to the destination-site computer.

In its Motion to Amend, Patent Owner proposes six substitute claims, with two proposed substitute claims, each with similar limitations, for each set. Mot. 1–6. Proposed substitute claims 28 and 29, corresponding to the first set of claims directed to a network memory system, recite (with underlined material indicating language added to the original patent claims and material in brackets indicating language removed from the original patent claims):

> 28. (proposed substitute for claim 2) The network memory system of claim 1 <u>wherein the source-site appliance is configured determine whether the portion of the transmitted data corresponds to the locally accessible data via a process comprising:</u>
>
> <u>identifying sync points in the transmitted data having matches in the locally accessible data by (i) determining hash values corresponding to different byte locations of the transmitted data, (ii) finely filtering the hash values using a fine filter to determine a finely filtered set of the hash values corresponding to fine sync points, and coarsely filtering the hash values using a coarse filter to determine a coarsely filtered</u>

set of the hash values corresponding to coarse sync points, and (iii) determining from the finely filtered set of the hash values and the coarsely filtered set of the hash values, a plurality of hash values matching hash values of the locally accessible data; and

performing for byte locations with matching hash values, a forward and backward memory comparison between the transmitted data and data representing the locally accessible data, the forward and backward comparison to identify a size of a matching region of the transmitted data with the data representing the locally accessible data, and performing based on results of the forward and backward memory comparison, a determination of a locally accessible portion of the transmitted data corresponding to the matching region that is locally accessible at the destination-site appliance and a non-locally accessible portion of the transmitted data that is not locally accessible at the destination-site appliance; and

wherein the source-site appliance is further configured to generate a plurality of instructions based on the determination, wherein the plurality of instructions comprise a retrieve instruction and a store instruction, the retrieve instruction indicating to the destination-site appliance to retrieve the locally accessible portion of the transmitted data from a database locally accessible to the destination-site appliance, and the store instruction indicating to the destination–site appliance to store the non-locally accessible portion of the transmitted data.

29. (proposed substitute for claim 11) The network memory system of claim [1] 28 wherein the store instruction further indicates to the destination-site appliance an index within [a] the database for storing another copy of the locally accessible portion of the transmitted data together with the non-locally accessible portion of the data.

C. Prior Art

The pending grounds of unpatentability in the instant *inter partes* review are based on the following prior art:

1. U.S. Patent No. 6,667,700 B1, issued December 23, 2003 (Ex. 1004, "McCanne '700");

2. U.S. Patent No. 8,069,225 B2, filed August 12, 2003, issued November 29, 2011 (Ex. 1005, "McCanne '225"); and

3. U.S. Patent Application Publication No. 2004/0088376 A1, published May 6, 2004 (Ex. 1003, "McCanne '376").[2]

In their papers, the parties also refer to the following references:

4. U.S. Patent Application Publication No. 2005/0091234 A1, filed October 23, 2003, published April 28, 2005 (Ex. 1007, "Hsu");

5. Silver Peak Systems, Inc., "The Benefits of Byte-Level WAN Deduplication: WAN Deduplication–Doing More with Less," 1–4 (2008) (Ex. 2001, "Silver Peak White Paper"); and

6. Neil T. Spring & David Wetherall, "A Protocol-Independent Technique for Eliminating Redundant Network Traffic," *SIGCOMM '00*, 87–95 (2000) (Ex. 2002, "Spring").

D. Pending Grounds of Unpatentability

The instant *inter partes* review involves the following grounds of unpatentability:

Reference(s)	Basis	Claims
McCanne '376	35 U.S.C. § 102(b)	1–27
McCanne '700 and McCanne '225	35 U.S.C. § 103(a)	1–27

Dec. on Inst. 21.

[2] We refer to McCanne '376, McCanne '700, and McCanne '225 collectively as the "McCanne references."

II. ANALYSIS

A. Challenged Claims

As noted above, Patent Owner did not file a Patent Owner Response to the Petition. In its Motion to Amend, Patent Owner "moves to cancel Claims 1–27 and to substitute Claims 28–33 in their place." Mot. 1; *see* 35 U.S.C. § 316(d)(1); 37 C.F.R. § 42.121(a)(3) ("A motion to amend may cancel a challenged claim or propose a reasonable number of substitute claims."). Patent Owner's request to cancel claims 1–27 is not contingent on the claims being determined to be unpatentable. We grant the request and turn to the proposed substitute claims in the Motion to Amend.

B. Proposed Substitute Claims

As the moving party, Patent Owner bears the burden of proof to establish that it is entitled to the relief requested. *See* 37 C.F.R. § 42.20(c). Entry of proposed amendments is not automatic, but occurs only upon the patent owner having met the requirements of 37 C.F.R. § 42.121 and demonstrated, by a preponderance of the evidence, the patentability of the proposed substitute claims. *See Idle Free Systems, Inc. v. Bergstrom, Inc.*, IPR2012-00027, slip op. at 7–8 (PTAB June 11, 2013) (Paper 26, "*Idle Free*") (informative); *Toyota Motor Corp. v. American Vehicular Sciences LLC*, IPR2013-00419, slip op. at 4–5 (PTAB Mar. 7, 2014) (Paper 32, "*Toyota*"). For the reasons explained below, we conclude that Patent Owner has met its burden with respect to claims 28 and 30, but not claims 29 and 31–33.

1. No Broadening of Scope

Proposed substitute claims in an *inter partes* review "may not enlarge the scope of the claims of the patent." 35 U.S.C. § 316(d)(3); *see* 37 C.F.R. § 42.121(a)(2)(ii). In its Motion to Amend, Patent Owner proposes claim 28 as a substitute for claim 2, claim 29 as a substitute for claim 11, claim 30 as a substitute for claim 13, claim 31 as a substitute for claim 22, claim 32 as a substitute for claim 24, and claim 33 as a substitute for claim 27. Mot. 1–6. Each claim includes all of the limitations of the corresponding claim for which it is a substitute, and adds additional limitations. No limitations are removed. Petitioner in its Opposition does not dispute Patent Owner's assertion that the proposed substitute claims do not enlarge the scope of the claims of the '583 patent. *See* Mot. 8. We are persuaded that the proposed substitute claims do not enlarge the scope of the original patent claims.

2. Written Description Support

Pursuant to 37 C.F.R. § 42.121(b), a motion to amend in an *inter partes* review must set forth "[t]he support in the original disclosure of the patent for each claim that is added or amended," and "[t]he support in an earlier-filed disclosure for each claim for which benefit of the filing date of the earlier filed disclosure is sought."

In its Motion to Amend, Patent Owner explains how the subject matter of proposed substitute claims 28–31[3] have written description support in the Specification of the '697 application, which issued as the '583 patent,

[3] We address proposed substitute claims 32 and 33 separately below. *See infra* Section II.B.6.

as filed. Mot. 7–8 & n.2; *see* Ex. 1009, 403–60.[4] Regarding the added limitations in proposed substitute claims 28 and 30, Patent Owner relies on Figures 5 and 7A, and paragraphs 52–59, 63, and 66–69, of the ’697 application, describing the recited filtering, forward and backward memory comparison, and generation of both store and receive instructions. Mot. 7–8. Regarding the added limitations in proposed substitute claims 29 and 31, Patent Owner relies on Figure 7A and paragraphs 69 and 70. *Id*. Patent Owner also cites support in the ’697 application, as filed, for the other limitations of proposed substitute claims 28–31, as shown in the figures of the application. *Id*. Petitioner in its Opposition does not argue that the claims lack sufficient written description support.

Upon review of Patent Owner’s arguments and the disclosure of the ’697 application, we conclude that Patent Owner has made a sufficient showing that proposed substitute claims 28–31, as a whole, have written description support in the disclosure of the ’697 application as filed.

3. Claim Interpretation

The patent owner bears the burden in a motion to amend to show a patentable distinction of each proposed substitute claim over the prior art. *See* 37 C.F.R. § 42.20(c). Accordingly, a “patent owner should identify specifically the feature or features added to each substitute claim, as compared to the challenged claim it replaces, and come forward with

[4] Petitioner filed a copy of the prosecution history of the ’583 patent as three documents each numbered Exhibit 1002. To ensure a clear record, we renumber the document labeled “Part 2 of 3” as Exhibit 1008, and renumber the document labeled “Part 3 of 3” as Exhibit 1009. *See* 37 C.F.R. § 42.63(c) (“exhibits must be uniquely numbered sequentially”).

technical facts and reasoning about those feature(s)." *Idle* Free at 7. This includes "construction of new claim terms, sufficient to persuade the Board that the proposed substitute claim is patentable over the prior art of record, and over prior art not of record but known to the patent owner." *Id.*; *Toyota* at 5. Further, consistent with the statute and legislative history of the Leahy-Smith America Invents Act, Pub. L. No. 112-29, 125 Stat. 284 (2011) ("AIA"), the Board interprets claims using the "broadest reasonable construction in light of the specification of the patent in which [they] appear[]." 37 C.F.R. § 42.100(b); *see also* Office Patent Trial Practice Guide, 77 Fed. Reg. 48,756, 48,766 (Aug. 14, 2012).

In its Motion to Amend, Patent Owner provides a proposed interpretation for three terms in each of the proposed substitute claims:

Term	Proposed Interpretation
"sync point"	"a location in a data flow having data meeting a specified criteri[on]"
"fine sync point"	"a location in a data flow having data meeting a specified fine criteri[on] that is less restrictive than a coarse criteri[on]"
"coarse sync point"	"a location in a data flow having data meeting a specified coarse criteri[on] more restrictive than a fine criteri[on]"

Mot. 6–7 (citing Ex. 1001, col. 9, ll. 20–57). Petitioner in its Opposition does not argue that Patent Owner's proposed interpretations are incorrect. We agree that Patent Owner's proposed interpretations represent the broadest reasonable interpretation of the claims in light of the Specification of the '583 patent. The Specification discloses fine filter 560 and coarse filter 565, where "[t]he appliance designates the locations in the data flow which meet the fine and coarse filter criteria as fine and coarse sync-points,

respectively," and the filter criteria for coarse filter 565 are "more restrictive" than the filter criteria for fine filter 560. Ex. 1001, col. 9, ll. 20–38. The Specification also describes an example where "the filter criteri[on] declares a fine sync-point when the top five bits of the hashes are all zeros and a coarse filter criteri[on] which stores or compares hashes when the top ten bits of the hashes are all zeros" (i.e., the filter criterion for the coarse filter is more restrictive). *Id*. at col. 9, ll. 30–34. Accordingly, we interpret "sync point," "fine sync point," and "coarse sync point" as set forth above.

Also, in the Decision on Institution, we interpreted various claim terms of the independent claims of the '583 patent as follows:

Term	Interpretation
"network memory" (claims 1, 12, and 23)	device(s) in a network for storing information
"appliance" (claims 1, 12, and 23)	hardware and/or software elements applied to a particular use
"instruction" (claims 1, 12, and 23)	a message or signal that indicates, explicitly or implicitly, an action to perform

See Dec. on Inst. 6–10. Patent Owner's proposed substitute claims depend from the original independent claims of the '583 patent, and the parties do not dispute these interpretations in their papers. We do not perceive any reason or evidence that now compels any deviation from these interpretations. Accordingly, for purposes of assessing the proposed substitute claims, we incorporate our previous analysis of the three terms above. *See id*.

We also interpreted various means-plus-function limitations in independent claim 23 in the Decision on Institution. *See id*. at 10–14. We address those limitations in the discussion below regarding proposed substitute claims 32 and 33. *See infra* Section II.B.6.

4. Claims 28 and 30

Having determined that Patent Owner's proposed substitute claims do not enlarge the scope of the claims of the '583 patent, determined that proposed substitute claims 28–31 have sufficient written description support, and interpreted the language of the claims, we turn to each set of claims specifically to determine if Patent Owner has met its burden of proof, beginning with proposed substitute claims 28 and 30.

In a motion to amend, the patent owner bears the burden of proof to demonstrate patentability of its proposed substitute claims over the prior art, and, thus, entitlement to the claims. *Idle Free* at 7. This does not mean that the patent owner is assumed to be aware of every item of prior art known to a person of ordinary skill in the art. However, the patent owner should explain in its motion why the proposed substitute claims are patentable over not just the prior art of record, but also prior art not of record but known to the patent owner:

> A patent owner should identify specifically the feature or features added to each substitute claim, as compared to the challenged claim it replaces, and come forward with technical facts and reasoning about those feature(s), including construction of new claim terms, sufficient to persuade the Board that the proposed substitute claim is patentable over the prior art of record, and over prior art not of record but known to the patent owner. The burden is not on the petitioner to show unpatentability, but on the patent owner to show patentable

> distinction over the prior art of record and also prior art known to the patent owner. Some representation should be made about the specific technical disclosure of the closest prior art known to the patent owner, and not just a conclusory remark that no prior art known to the patent owner renders obvious the proposed substitute claims.

Id. This includes addressing the basic knowledge and skill set possessed by a person of ordinary skill in the art even without reliance on any particular item of prior art. *Id*. at 7–8; *Toyota* at 4–5. The petitioner then has the opportunity, in its opposition, to argue any deficiency in the patent owner's motion and "come forward with specific evidence and reasoning, including citation and submission of any applicable prior art," to rebut the patent owner's position on patentability. *Idle Free* at 8.

Proposed substitute claims 28 and 30 add a number of limitations to the corresponding claims for which they are substitutes, which we refer to for convenience as follows:

> *(1) "fine and coarse filtering of hash values" limitations:* "identifying sync points in the transmitted data having matches in the locally accessible data by (i) determining hash values corresponding to different byte locations of the transmitted data, (ii) finely filtering the hash values using a fine filter to determine a finely filtered set of the hash values corresponding to fine sync points, and coarsely filtering the hash values using a coarse filter to determine a coarsely filtered set of the hash values corresponding to coarse sync points, and (iii) determining from the finely filtered set of the hash values and the coarsely filtered set of the hash values, a plurality of hash values matching hash values of the locally accessible data"; and
>
> *(2) "forward and backward memory comparison" limitations:* "performing for byte locations with matching hash values, a forward and backward memory comparison between the transmitted data and data representing the locally accessible data, the forward and backward comparison to identify a size of

> a matching region of the transmitted data with the data representing the locally accessible data, and performing based on results of the forward and backward memory comparison, a determination of a locally accessible portion of the transmitted data corresponding to the matching region that is locally accessible at the destination-site appliance and a non-locally accessible portion of the transmitted data that is not locally accessible at the destination-site appliance . . . wherein the plurality of instructions comprise a retrieve instruction and a store instruction, the retrieve instruction indicating to the destination-site appliance to retrieve the locally accessible portion of the transmitted data from a database locally accessible to the destination-site appliance, and the store instruction indicating to the destination-site appliance to store the non-locally accessible portion of the transmitted data."

See Mot. 1–4.

Patent Owner argues that pre-existing data de-duplication systems reduced network traffic by dividing data into "segments" (or "chunks") and transmitting a "reference" (or "token"), rather than the data segment itself, when the destination device already has a copy of the data segment. *Id*. at 9. Patent Owner cites the Silver Peak White Paper's[5] description of such systems, as well as the McCanne references, as examples of that approach. *Id*. (citing Exs. 1003–1005, 2001). The McCanne references, for example, describe segmenting input data by "identifying 'cut points,' such as offsets in the input data where one segment ends and the next segment begins." Ex. 1004, col. 6, ll. 59–64. The segmentation is based on the content of the data, such that "segment boundaries should always appear in the same place for the same sequences of data, regardless of the context in which that data appeared," and both the source and destination devices determine segments

[5] The Silver Peak White Paper was provided as an exhibit with Patent Owner's Motion to Amend. Ex. 2001.

the same way. *Id*. at col. 6, l. 65–col. 7, l. 26; Ex. 1003 ¶ 47; Ex. 1005, col. 12, ll. 27–39. After the data are segmented, the source device performs a segment-by-segment lookup against all data segments in memory. Ex. 1004, col. 8, ll. 53–55. If a match is found (indicating that the destination device has a copy of a data segment), the source device replaces the data segment with a "reference" and sends just the reference instead, causing the destination device to retrieve the data locally and reducing network traffic between the devices. *Id*. at col. 9, ll. 20–32; Ex. 1003 ¶¶ 69–70, 75.

Patent Owner contends that the proposed substitute claims describe a very different approach. Mot. 10–14. Instead of relying on inflexible "pre-segmented data" and inefficiently searching through all data segments, as in the McCanne references, the proposed substitute claims recite a specific method of (1) identifying sync points in the data by determining hash values for different byte locations in the data, and finely and coarsely filtering the hash values to locate matches; and (2) performing a forward and backward memory comparison to identify a matching region of data of optimum length. *Id*. at 10–11. Patent Owner explains:

> Data deduplication systems like McCanne work well when changes to the data are isolated to small contiguous regions of the file, but perform poorly when changes are dispersed throughout the file or when the changes themselves are small (referred to as "dynamic data"). Because these prior systems use pre-segmented data, they cannot operate at byte-level granularity and cannot detect partial matches between segments. Even if there is only a very small difference between two segments (e.g., a 1% difference), these systems may be unable to identify the matching portion and treat the whole segment as non-matching. As a result, prior art systems have limited efficiency when dynamic data is present.

Id. at 10 (citation omitted). Patent Owner's explanation as to why the proposed substitute claims are different from pre-existing data de-duplication systems is persuasive and is supported by the evidence of record. *See* Ex. 2001, 2–3 (describing problems with handling dynamic data in token-based systems); Ex. 1004, col. 7, ll. 36–41 (recognizing that the pre-segmented data approach "does not produce the optimal segmentation (i.e., maximizing the size of segments while simultaneously maximizing the number of repeated segments found)"); Ex. 1001, col. 9, ll. 40–44 (stating that using fine and coarse hash tables helps to "optimize" the tradeoff between maximizing the number of generated sync points and limiting the size of the tables).

Patent Owner also accounts for the knowledge of a person of ordinary skill in the art in two respects.

"Fine and Coarse Filtering of Hash Values" Limitations

Patent Owner states that "hash values and filters" were known in "other contexts," but the specific method recited in the proposed substitute claims of determining hash values at byte locations of data, and identifying sync points by finely and coarsely filtering the hash values, was not known. Mot. 14. According to Patent Owner, the invention of the proposed substitute claims allows for "rapid search, while preserving the ability to match at the byte level, which none of the prior art of which the Patent Owner is aware could provide at the time the invention was made either alone or in combination." *Id*.

Petitioner responds that Hsu, a reference cited during prosecution of the '583 patent, discloses the "fine and coarse filtering of hash values"

limitations recited in the proposed substitute claims. Opp. 4–7 (citing Ex. 1007 ¶¶ 16, 60–63, Fig. 6). Hsu describes a "data chunking system" that divides data into "fixed-sized chunks" so that duplicate data may be identified and only unique data chunks are stored or transmitted. Ex. 1007 ¶¶ 13–14, Abstract. The system "chunks data by selecting a chunk of fixed size, then moving or 'sliding' a window of a fixed size, across the data stream until a match to existing data is found." *Id.* ¶ 16. Hsu describes one way of determining whether data in the window matches a previously remembered chunk (and is not a "false positive"). *Id.* ¶¶ 53, 60.

Figure 6 of Hsu is reproduced below.

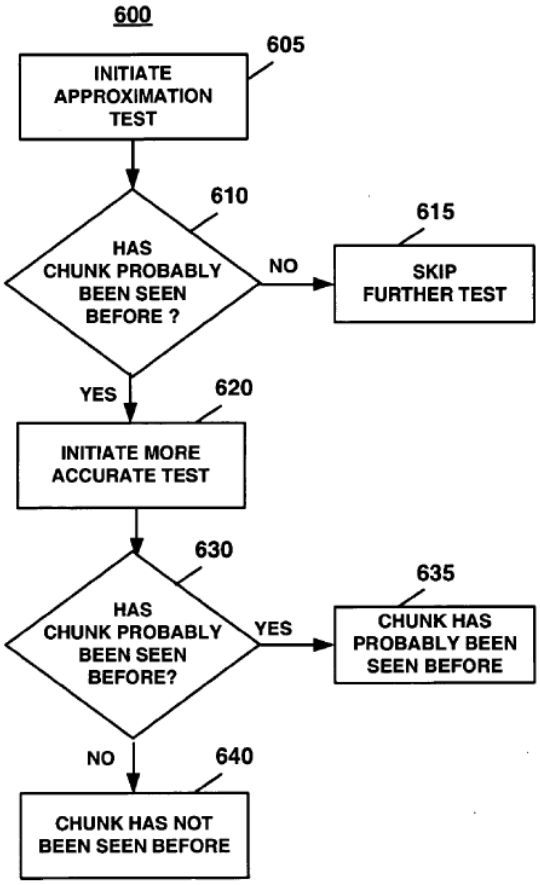

Figure 6 depicts an "approximation test" at step 605 and a "more accurate test" at step 620. The approximation test determines whether the data in the

window has "probably been seen before," and may be "performed by computing a rolling checksum of the data and looking up the computed value in a hash table." *Id*. ¶¶ 42, 60–61. The more accurate test may involve "computing a cryptographic hash of the data in the window and looking up the computed value in a hash table." *Id*. ¶¶ 42, 62.

Petitioner equates the approximation test with the fine filtering recited in the proposed substitute claims, and the more accurate test with the recited coarse filtering. Opp. 5–7. As Patent Owner points out, however, Hsu is a token-based system, like the McCanne references, that operates on "fixed-size chunks." Reply 2–3. Hsu calculates a hash value for the data in the window and compares it with every value in a hash table to locate potential matches. Ex. 1007 ¶¶ 42, 60–62. It does not identify sync points in the data by "determining hash values corresponding to different byte locations of the transmitted data," "finely filtering the hash values . . . to determine a finely filtered set of the hash values corresponding to *fine sync points*," "coarsely filtering the hash values . . . to determine a coarsely filtered set of the hash values corresponding to *coarse sync points*," and "*determining from the finely filtered set of the hash values and the coarsely filtered set of the hash values*, a plurality of hash values matching hash values of the locally accessible data," as recited in the proposed substitute claims. Thus, although Hsu may be considered as teaching the general concept of matching at different levels of granularity, we are not persuaded that it teaches or suggests the specific "fine and coarse filtering of hash values" limitations recited in the proposed substitute claims.

"Forward and Backward Memory Comparison" Limitations

Patent Owner acknowledges that "the general concept of performing direct memory comparisons of data to determine a matching region . . . was known in the context[] of network-layer caches," citing Spring[6] as the closest prior art on the subject. Mot. 11–12. Spring describes a method of "identify[ing] repeated byte ranges between packets to avoid retransmitting . . . redundant data" in a shared packet cache arrangement. Ex. 2002, 1, 3. A cache holds the "most recent packets." *Id*. at 2. For every packet of an input stream, the system generates a set of "fingerprints" (unique "integers generated by a one-way function applied to a set of bytes") and checks each fingerprint against the indexed fingerprints of the cache. *Id*. If there is a match, the input packet likely has the same content as the packet in the cache at the regions corresponding to the fingerprint. *Id*. The system then compares the input and cached packets to verify the match, and "[t]hen the matching region is expanded, both to the left and to the right, byte-by-byte in each packet, to find the largest matching region." *Id*. Once a matching region is determined, the system can transmit tokens that allow the data to be retrieved from the shared packet cache, rather than transmitting the data itself. *Id*. at 1, 3.

Patent Owner argues that it would not have been obvious to incorporate the technique of Spring into a network data de-duplication system, as recited in the proposed substitute claims, because Spring "had very limited practical application in the network memory context." Mot. 12. Patent Owner's position is supported by the statement in McCanne '376 that due to Spring's small cache and first-in first-out replacement policy, "the

[6] Spring was cited during prosecution of the '583 patent. Ex. 1001, 2.

efficacy of [Spring's] approach is limited to detecting and exploiting communication redundancies that are fairly localized in time." Ex. 1003 ¶ 20; *see* Mot. 12. The proposed substitute claims, which identify sync points from which forward and backward memory comparisons are performed, are not limited to only recently transmitted data.

Patent Owner also asserts that the specific combination of "fine and coarse filtering of hash values" and "forward and backward memory comparison" limitations recited in the proposed substitute claims represents a practical solution to the "tradeoff" that exists with data de-duplication systems, and is not solved by any of the prior art of record. Mot. 12–14. Specifically, Patent Owner states that there is a "tradeoff" between the size of an index and the likelihood that an indexed segment will be matched. *Id*. Spring uses a small fixed-size cache and small packets, and, thus, works best for only recently transmitted data. *Id*. By contrast, according to Patent Owner, the proposed substitute claims provide a practical solution to the tradeoff by operating at the byte-level and using a combination of fine and coarse filters to identify sync points from which forward and backward memory comparisons are performed. *Id*. Patent Owner's explanations regarding the prior art and why the proposed substitute claims allegedly would not have been obvious are supported by the record and are persuasive.

We also note that although Petitioner addresses the "fine and coarse filtering of hash values" limitations in its Opposition (arguing that they are taught by Hsu), Petitioner does not argue that Hsu—or any other reference—teaches or suggests the "forward and backward memory comparison" limitations. Nor does Petitioner propose any specific combination of references that allegedly would have rendered obvious the proposed

substitute claims as a whole. Thus, Patent Owner's assertions regarding key aspects of the prior art, such as Spring, essentially are unrebutted.

Petitioner's Remaining Arguments

Petitioner makes two additional arguments in its Opposition regarding proposed substitute claims 28 and 30. First, Petitioner argues that Patent Owner only attempted to distinguish the proposed substitute claims over the prior art references at issue in this proceeding—the three McCanne references—not other prior art of which Patent Owner is aware. Opp. 3–4. We disagree. In its Motion to Amend, Patent Owner addresses the prior art of which it is aware generally, including the McCanne references, and explains why it believes proposed substitute claims 28 and 30 are patentable over another reference, Spring, and the prior art discussed in the Silver Peak White Paper, alone or in combination with the McCanne references. *See* Mot. 9–15; Reply 1–2. Under the particular factual circumstances of this case, we determine that Patent Owner has provided a sufficient explanation and technical reasoning for why proposed substitute claims 28 and 30 are patentable over the prior art of record and prior art of which Patent Owner is aware, and Petitioner has not rebutted that showing successfully.

Second, Petitioner argues that Patent Owner failed to provide a declaration from a technical expert in support of its arguments regarding patentability, and did not provide evidence as to "what it believes would constitute the level of 'ordinary' skill in the art," including "some indication of education, training, and/or work experience." Opp. 7–8. Testimony from a technical expert certainly can be helpful to show what would have been known to a person of ordinary skill in the art and explain the significance of

features added in a proposed substitute claim. *See Idle Free* at 7–8. It is not a prerequisite for a motion to amend, however, just as it is not a prerequisite for a petition seeking *inter partes* review. Every case is different and will depend on its own facts. *See Perfect Web Techs., Inc. v. InfoUSA, Inc.*, 587 F.3d 1324, 1329 (Fed. Cir. 2009) ("Nor are expert opinions always a prerequisite [for an obviousness analysis]."); *Chore-Time Equip., Inc. v. Cumberland Corp.*, 713 F.2d 774, 779 n.2 (Fed. Cir. 1983) ("an invention may be held to have been either obvious (or nonobvious) without a specific finding of a particular level of skill or the reception of expert testimony on the level of skill where, as here, the prior art itself reflects an appropriate level and a need for such expert testimony has not been shown"); Tr. 37:23–38:16 (Petitioner acknowledging that a technical expert is not required). Under the particular factual circumstances of this case, we determine that Patent Owner has provided a sufficient explanation of why proposed substitute claims 28 and 30 are patentable over the prior art, without reliance on testimony from a technical expert.

We also disagree with Petitioner's argument regarding the level of ordinary skill in the art. Patent Owner explains in its Motion to Amend what a person of ordinary skill in the art would have known at the time of the '583 patent, and cites prior art references of record and other references of which it is aware. *See* Mot. 9–15 (citing Exs. 1003–1005, 2001, 2002). Moreover, Petitioner does not explain *why* an explicit definition of the level of ordinary skill in the art is necessary under the circumstances, or argue for a particular definition under which the proposed substitute claims would have been obvious to a person of ordinary skill. We also note that Petitioner did not define explicitly the level of ordinary skill in the art for the '583 patent in its

Petition. Under the particular factual circumstances of this case, we determine that the prior art references before us and Patent Owner's accompanying explanation provide sufficient guidance as to the level of ordinary skill in the art. *See Okajima v. Bourdeau*, 261 F.3d 1350, 1355 (Fed. Cir. 2001) (the prior art itself can reflect the appropriate level of ordinary skill in the art); *Toyota* at 4 ("[I]t would not be meaningful to say that a person of ordinary skill in the art possesses this many years of education and that many years of experience. Rather, the discussion should be specific about the technical knowledge pertaining to the feature added.").

Conclusion

Based on the evidence of record in this proceeding, Patent Owner has shown, by a preponderance of the evidence, that proposed substitute claims 28 and 30 are patentable over the prior art. Patent Owner's Motion to Amend is granted as to proposed substitute claims 28 and 30.

5. Claims 29 and 31

A patent owner may propose a reasonable number of substitute claims for each challenged claim. 35 U.S.C. § 316(d)(1)(B). Absent special circumstances, it is presumed that only one substitute claim is needed to replace each challenged claim. 37 C.F.R. § 42.121(a)(3). In addition, amendments must be responsive to a ground of unpatentability involved in the trial. 37 C.F.R. § 42.121(a)(2)(i). In *Idle Free*, the Board explained how these requirements may be met in the situation where one proposed substitute claim adds limitations to an original claim and a second, dependent proposed substitute claim adds further limitations:

> Even in the case of proposing only one substitute claim for a particular challenged claim, if the substitute claim is presented as patentable over prior art on the same basis that another substitute claim on which it depends is patentable over prior art, then the patent owner should provide meaningful reasons for making the additional changes effected by that dependent claim. For instance, where independent claim 1 and dependent claims 2 and 3 are challenged, and claims 2 and 3 each depend on claim 1, a patent owner may propose three substitute claims 4–6 and indicate that claim 4 replaces claim 1, claim 5 replaces claim 2, and claim 6 replaces claim 3 . . . .
>
> [I]f the patent owner also proposes to add further features into proposed substitute claims 5 and 6, the patent owner should provide meaningful reasons to establish a special circumstance for adding those features. Without any explanation, at least facially the insertion of those additional features would not be responsive to an alleged ground of unpatentability. Showing a patentable distinction between each of proposed substitute claims 5 and 6, and proposed substitute claim 4, would be one such special circumstance. Adding features for no meaningful reason is generally inconsistent with proposing a reasonable number of substitute claims, and also not responsive to an alleged ground of unpatentability. Any such proposed substitute claim may be denied entry by the Board. *See* 37 C.F.R. §§ 42.121(a)(2) and (a)(3).

Idle Free at 9–10.

Patent Owner proposes claim 29 as a "substitute for claim 11." Mot. 2. Claim 11 depends from independent claim 1. Proposed substitute claim 29 modifies the dependency to depend from proposed substitute claim 28, rather than claim 1, and adds the limitation that the store instruction indicates to the destination-side appliance an index within the database for storing "another copy of the locally accessible portion" of the transmitted data "together with the non-locally accessible portion of the data." *Id*. A similar situation is presented with respect to proposed substitute claim 31,

which is a "substitute for claim 22." *Id*. at 4. Claim 22 depends from independent claim 12. Proposed substitute claim 31 modifies the dependency to depend from proposed substitute claim 30, rather than claim 12, and adds the "another copy" limitation. *Id*.

Patent Owner argues that proposed substitute claims 28 and 30 are patentable based on the limitations they add to the claims for which they are substitutes (claims 2 and 13). *Id*. at 9–14. Patent Owner further argues that proposed substitute claims 29 and 31, which depend from and add additional limitations to proposed substitute claims 28 and 30, are "independently patentable over the prior art and over claims 28 [and 30]." *Id*. at 14–15. Thus, the issue is whether Patent Owner has shown a special circumstance for making the additional changes in proposed substitute claims 29 and 31, such as a patentable distinction over the parent proposed substitute claims. We conclude that it has not.

Patent Owner acknowledges that "[a] person of ordinary skill in the art would have recognized that storing multiple copies of data is common in other contexts, such as for the purposes of improving data reliability," but contends that prior art systems did not require "storing data at any particular index location (or together with any other data)." *Id*. Patent Owner further argues that storing an additional copy of data would not have been "necessarily desirable or an obvious feature to implement" in the data de-duplication context where storage space is limited. *Id*.

To demonstrate a patentable distinction over parent proposed substitute claims 28 and 30, however, we must assume the parent claims to be prior art. *See Idle Free* at 9–10. Patent Owner's analysis does not account for the parent claims. In particular, parent proposed substitute

claims 28 and 30 recite a "retrieve instruction" instructing the destination-side appliance to retrieve the "locally accessible portion" of the data, and a "store instruction" instructing the destination-side appliance to store the "non-locally accessible portion" of the data. Proposed substitute claims 29 and 31 recite that the store instruction further indicates to the destination-side appliance an index within the database for storing "another copy of the locally accessible portion . . . together with the non-locally accessible portion of the data." Thus, the parent proposed substitute claims already recite the basic feature of retrieving one, previously-stored portion of the data, and proposed substitute claims 29 and 31 simply add the feature of storing another copy of that portion. Patent Owner does not explain sufficiently why storing an additional copy would have been non-obvious, assuming the former to be prior art. *See id*. Nor does Patent Owner distinguish sufficiently the instant situation from other contexts where, as Patent Owner acknowledges, storing an extra copy of data would have been "common." *See* Mot. 15. Patent Owner also does not cite any evidence in the record to support its assertion that storage space would have been such a concern to a person of ordinary skill in the art that storing another copy of the locally accessible portion of the data would not have been obvious. *See id*.

Patent Owner also argues that the "prior art recognize[d] a desire to link related data segments that are likely to appear together in a data stream." Mot. 14. For example, McCanne '700 uses hierarchical referencing to group segment references at different indices. *Id*. at 14–15 (citing Ex. 1004, col. 10, ll. 11–36). Patent Owner contends that, by doing so, McCanne '700 teaches away from storing another copy of the locally

accessible portion "together with" the non-locally accessible portion, as recited in proposed substitute claims 29 and 31. *Id*. This argument is not persuasive, as Patent Owner again fails to account for the parent proposed substitute claims, which recite retrieval of one previously-stored copy of the data, as prior art. Further, we are not persuaded that McCanne '700 teaches away from the proposed substitute claims. A reference does not teach away if it expresses merely a general preference for an alternative invention from amongst options available to the ordinarily skilled artisan, and the reference does not "criticize, discredit, or otherwise discourage the solution claimed." *In re Fulton*, 391 F.3d 1195, 1201 (Fed. Cir. 2004). Patent Owner does not point to anything in McCanne '700 criticizing, discrediting, or otherwise discouraging the storage of an additional copy of the locally accessible portion of the data together with the non-locally accessible portion. The mere fact that McCanne '700 groups related segment references does not mean that it teaches away from storing an additional copy.

Patent Owner has not shown a patentable distinction between proposed substitute claims 29 and 31 and their parent proposed substitute claims 28 and 30, and has not shown any other special circumstance for adding the "another copy" limitation to proposed substitute claims 29 and 31. The "another copy" limitation, therefore, is not responsive to a ground of unpatentability involved in the trial. For the same reasons, proposed substitute claims 29 and 31 amount to a second proposed substitute claim (in addition to the parent proposed substitute claims 28 and 30) for claims 2 and 13, and Patent Owner has not demonstrated a sufficient need for exceeding the presumption that only one substitute claim is needed to replace a challenged claim. Patent Owner's Motion to Amend, therefore, is denied as

to proposed substitute claims 29 and 31 under 37 C.F.R. §§ 42.121(a)(2)(i) and (a)(3).

6. Claims 32 and 33

As explained above, the patent owner in an *inter partes* review bears the burden in a motion to amend to show a patentable distinction of each proposed substitute claim over the prior art, including "construction of new claim terms, sufficient to persuade the Board that the proposed substitute claim is patentable." *Idle Free* at 7; *see supra* Section II.B.3. "If there is any new term used in a proposed substitute claim, the meaning of which reasonably can be anticipated as subject to dispute, the patent owner should provide a proposed claim construction in the motion to amend. If a proposed substitute claim adds a means-plus-function element, the corresponding structure, material, or acts described in the specification should be identified." *Toyota* at 5.

Patent Owner has not met its burden with respect to proposed substitute claims 32 and 33 for two reasons. First, Patent Owner has not provided a proposed claim interpretation for certain limitations in the claims expressed in means-plus-function format under 35 U.S.C. § 112, sixth paragraph.[7] Proposed substitute claim 32 depends from independent claim 23, and proposed substitute claim 33 depends from proposed substitute claim 32. Mot. 4–6. Independent claim 23 recites eight means-plus-function limitations (emphases added):

[7] Section 4(c) of the AIA re-designated 35 U.S.C. § 112, sixth paragraph, as 35 U.S.C. § 112(f). Because the '583 patent has an effective filing date before September 16, 2012, we refer to the pre-AIA version of 35 U.S.C. § 112.

> 23. A network memory system comprising:
>
> a source-site appliance comprising: *means for identifying* locally accessible data of at least a destination-site appliance, *means for intercepting* transmitted data sent from a source-site computer and directed to a destination-site computer, *means for performing* a determination of whether a portion of the transmitted data corresponds to the locally accessible data of the destination-site appliance, *means for generating* an instruction based on the determination, and *means for sending* the instruction to the destination-site appliance over a wide area network; and
>
> the destination-site appliance comprising: *means for receiving* the instruction from the source-site appliance over the wide area network, *means for processing* the instruction to obtain the transmitted data, and *means for transferring* the transmitted data to the destination-site computer.

In the Decision on Institution, we explained that "[b]ecause Patent Owner did not file a Patent Owner Preliminary Response, we [did] not have the benefit of ascertaining Patent Owner's position on the claim construction of the means-plus-function limitations," and, therefore, interpreted the means-plus-function limitations "based on the record before us to the extent necessary to determine whether to institute an *inter partes* review." Dec. on Inst. 10–14. We specifically informed Patent Owner that it would have the opportunity in its Patent Owner Response to explain how it believes the limitations should be interpreted, and instructed the parties that any claim interpretation should identify specifically the alleged corresponding structure in the Specification, "including any computer or microprocessor, computer program, and algorithm." *Id*. at 10–11. In addition, prior to Patent Owner filing its Motion to Amend, we instructed Patent Owner that if its "proposed substitute claims contain *any* means-plus-function limitations, Patent Owner must identify in the respective motion (1) the written description support for

each claim, as a whole, including such a limitation, and (2) the specific portions of the specification that describe the structure, material, or acts corresponding to the claimed function(s)." Paper 22, 4 (emphasis added).

In its Motion to Amend, Patent Owner does not provide a proposed interpretation for any of the means-plus-function limitations in independent claim 23 (which are part of proposed substitute claims 32 and 33 by virtue of their dependency), or even indicate whether it agrees or disagrees with the preliminary interpretations in the Decision on Institution. *See* Mot. 6–7. Interpreting the means-plus-function limitations in the proposed substitute claims is critical to determining whether the proposed substitute claims are patentable (e.g., determining whether the prior art disclosed identical or equivalent structure to the corresponding structure for each limitation), particularly here where the limitations are computer-related. *See WMS Gaming Inc. v. International Game Tech.*, 184 F.3d 1339, 1349 (Fed. Cir. 1999) ("In a means-plus-function claim in which the disclosed structure is a computer, or microprocessor, programmed to carry out an algorithm, the disclosed structure is not the general purpose computer, but rather the special purpose computer programmed to perform the disclosed algorithm."). By not specifying the function and corresponding structure for each means-plus-function limitation in proposed substitute claims 32 and 33, Patent Owner has not met its burden to demonstrate patentability.

Second, Patent Owner's analysis of the two additional means-plus-function limitations in proposed substitute claim 32 is deficient. Proposed substitute claim 32 recites:

> *means for identifying* sync points in the transmitted data having matches in the locally accessible data by (i) determining hash values corresponding to different byte locations of the

> transmitted data, (ii) finely filtering the hash values using a fine filter to determine a finely filtered set of the hash values corresponding to fine sync points, and coarsely filtering the hash values using a coarse filter to determine a coarsely filtered set of the hash values corresponding to coarse sync points, and (iii) determining from the finely filtered set of the hash values and the coarsely filtered set of the hash values, a plurality of hash values matching hash values of the locally accessible data; and
>
> *means for performing* for byte locations with matching hash values, a forward and backward memory comparison between the transmitted data and data representing the locally accessible data, the forward and backward memory comparison to identify a size of a matching region of the transmitted data with the data representing the locally accessible data, and performing based on results of the forward and backward memory comparison, a determination of a locally accessible portion of the transmitted data that is locally accessible at the destination-site appliance and a non-locally accessible portion of the transmitted data that is not locally accessible at the destination-site appliance.

Mot. 4–5 (emphases added). Patent Owner identifies the following as the corresponding structure for both limitations:

> at least the "hardware and/or software elements" of the branch appliance 350 or central appliance 380 as described in FIGs. 8–9 and [0073]–[0075] [of the '697 application] including use of the data structure of FIG. 5 as described in [0052]–[0059] (including fine filter 560, coarse filter 565, hash tables 505, 525, and flow history pages 545), and process step 730 of FIG. 7B as described in [0067]–[0068].

Id. at 6–7.

Even assuming (without deciding) that Patent Owner's identification of a common structure for two distinct limitations is appropriate, we are not persuaded that the structure identified is sufficient. The corresponding structure of a means-plus-function limitation must be "more than simply a

general purpose computer or microprocessor" to avoid impermissible functional claiming. *Aristocrat Techs. Austl. Pty Ltd. v. Int'l Game Tech.*, 521 F.3d 1328, 1333 (Fed. Cir. 2008). If a special purpose computer is required to carry out the recited function, the specification must disclose "enough of an algorithm to provide the necessary structure" for performing the function, and the algorithm may be expressed "in any understandable terms including as a mathematical formula, in prose, or as a flow chart, or in any other manner that provides sufficient structure." *Finisar Corp. v. DirecTV Group, Inc.*, 523 F.3d 1323, 1340 (Fed. Cir. 2008) (citation omitted). Patent Owner's proposed interpretation is impermissibly vague, as Patent Owner identifies "at least" hardware and/or software elements "including" (but presumably not limited to) certain things. It also does not identify specifically the steps of any algorithm, instead stating generally the "use" of a data structure, described in Figure 5 and eight paragraphs of the Specification, and a single step in a different figure, Figure 7B.

Moreover, Patent Owner's analysis of the prior art in its Motion to Amend is not directed to the particular means-plus-function limitations of proposed substitute claim 32 as Patent Owner proposes they should be interpreted. Patent Owner instead analyzes the proposed substitute claims as a group, arguing proposed substitute claims 28, 30, and 32 together, and proposed substitute claims 29, 31, and 33 together. *See* Mot. 9–15. Because Patent Owner has not identified proper corresponding structure for the means-plus-function limitations in proposed substitute claim 32 and proposed substitute claim 33, which depends from proposed substitute claim 32, and has not provided a sufficient analysis of the prior art in view of the

proposed substitute claims as interpreted, we determine that Patent Owner has not met its burden.

Patent Owner has not shown, by a preponderance of the evidence, that proposed substitute claims 32 and 33 are patentable over the prior art. Patent Owner's Motion to Amend, therefore, is denied as to proposed substitute claims 32 and 33.

III. ORDER

Based on the record presented in this proceeding, Patent Owner has shown, by a preponderance of the evidence, that proposed substitute claims 28 and 30 are patentable, but has not met its burden with respect to proposed substitute claims 29 and 31–33.

In consideration of the foregoing, it is hereby:

ORDERED that Patent Owner's Motion to Amend is *granted* to the extent it requests the cancellation of claims 1–27 of the '583 patent;

FURTHER ORDERED that Patent Owner's Motion to Amend is *granted* as to proposed substitute claims 28 and 30, and *denied* as to proposed substitute claims 29 and 31–33;

FURTHER ORDERED that the copy of Exhibit 1002 filed on June 28, 2013, and labeled as "Part 2 of 3," is renumbered as Exhibit 1008; and

FURTHER ORDERED that the copy of Exhibit 1002 filed on June 28, 2013, and labeled as "Part 3 of 3," is renumbered as Exhibit 1009.

This is a final decision. Parties to the proceeding seeking judicial review of the decision must comply with the notice and service requirements of 37 C.F.R. § 90.2.

PETITIONER:

David M. O'Dell
Andrew S. Ehmke
John Russell Emerson
Kyle Howard
HAYNES AND BOONE, LLP
david.odell.ipr@haynesboone.com
andy.ehmke.ipr@haynesboone.com
russell.emerson.ipr@haynesboone.com
kyle.howard.ipr@haynesboone.com

PATENT OWNER:

Darren E. Donnelly
Jason E. Amsel
FENWICK & WEST LLP
ddonnelly-ptab@fenwick.com
jamsel-ptab@fenwick.com